NEMA17 Stepper Motor Controller

1.1 Description

A motor-mounted USB controller for a NEMA17 stepper. A separate USB-C Power Delivery input supplies the motor. The controller reports temperature and can sound an alarm.



Controller assembly

1.2 Device specifications

Parameter	Specification
Motor type	NEMA17 stepper
Controller	RP2040
Connections	USB-C data and USB Power Delivery supply
Motor connector	JST PH, 2.0 mm pitch
Monitoring	Onboard temperature sensor and audible alarm
Installation	Mounts on the back of the motor

1.3 Using the board

With motor power disconnected, connect the motor cable. Attach the data port to the computer and connect the PD supply. Open the motor dashboard, connect to the board and check the reported driver, temperature and fault state before commanding a move.

Device guide

2 Protocol reference

Core commands

Newline-delimited JSON at 115200 baud. Protocol version remains **3**; the new capability fields are additive. The transport drops whole lines longer than 512 characters and reads at most 128 characters per loop iteration.

Command	Fields	Behavior
`heartbeat`	none	Renew motion lease; no acknowledgement
`status`	`id`	Emit telemetry, then acknowledgement
`stop`	`id`	Release motor coils
`start`	`id`, `mode`, `resolution`, `direction`, `speed_sps`, optional `steps`	Start explicit motion after safety checks
`set_threshold`	`id`, `threshold_c`	Persist alarm threshold while stopped
`beep`	`id`	Play a 600 ms test tone
`set_device_name`	`id`, `name`	Persist USB name while stopped; acknowledge before reset after 750 ms

`mode` is `steps` or `continuous`; `direction` is `1` or `-1`. Counts and speed use the selected resolution. A supported resolution is a key in `capabilities.resolutions`; its value is the number of increments per full motor step. For example `quarter: 4` means four increments per full step, only when supported by the connected driver.

```
{"id":1,"cmd":"start","mode":"steps","resolution":"half","direction":1,"speed_sps":40,"steps":200}
```

An acknowledgement has `type: "ack"`, the supplied `id`, and `ok`. Failed commands include `error`; successful commands include the current `threshold_c`, `device_name`, and `restarting` state. Clients must wait for acknowledgement before displaying a setting as saved. A heartbeat does not start or resume motion.

Telemetry runs every 250 ms and retains existing protocol-3 fields (temperature/alarm, fault state, motion counts/state, current availability, USB naming, device ID, LED state). New identity fields are `board_id`, `mcu`, and `driver`.

Extended commands and capability fields

3 Mechanical information

3.1 Assembly and mounting

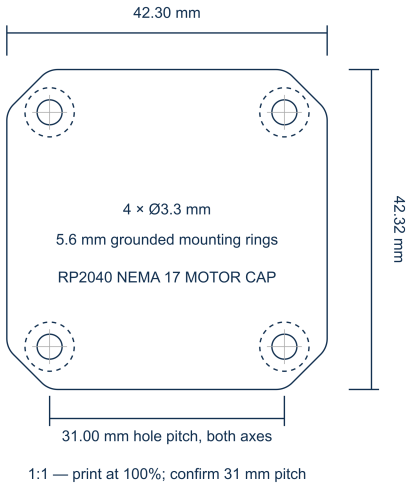

Component-side mounting template at 1:1 when printed at actual size.

3.2 Installation dimensions

The PCB measures 42.30 × 42.32 mm. Four Ø3.3 mm holes lie on a 31 × 31 mm grid. Each mounting ring is 5.6 mm across. The USB connectors and motor cable need clearance when mounted behind a motor.

To use the template above, print at actual size (100%) and verify the 31 mm pitch with a ruler.

3.3 Design resources

Device guide · **Protocol specification** · **PCB design**