RP2350 USB Motherboard

1.1 Description

The board carries a directly mounted RP2350A, 16 MiB of flash and a 12 MHz crystal. It hosts up to four USB devices through the onboard hub. J2–J5 are the four device sockets. The included program lets a potentiometer select three drawings on a flex display.

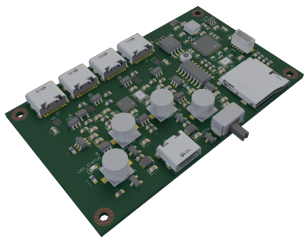

Assembly view

1.2 Device specifications

Parameter	Specification
Processor and storage	RP2350A, 16 MiB external flash, microSD
USB host	Four downstream USB-C ports, 100 mA design budget per port
Power	Regulated 5 V at board pads
Programming	5-pin JST SH SWD header, 1.0 mm pitch
Enclosure	Power lever extends 4.75 mm past the front edge
PCB dimensions	76 × 46 × 1.6 mm
Mounting holes	4 × Ø2.2 mm for M2 screws; 70 × 40 mm center spacing

1.3 Using the board

Supply regulated 5 V and ground at the underside power pads. Slide **POWER** to **ON** on the same edge as J1. Switching it **OFF** powers down the processor, hub and all four device ports. The computer can still power the console interface. Connect a potentiometer and a flex display to any two of the four downstream ports. Turn the knob to select a circle, diagonal stripe or checkerboard. The controller starts on product power and runs with the computer unplugged.

Device guide

2 Protocol reference

Open the computer service port at 115200 baud. Send one ASCII command per line ending in LF.

Command	Purpose	Reply
`id`	Identify the controller.	`DEVICE tscircuit motherboard 1.2.0`
`help`	List commands.	One line of command names.
`devices`	List the connected serial interfaces.	One `PORT` line per interface, followed by `OK`.
`status`	Read the selected drawing.	`SCENE 1`, `2` or `3`. Zero means the controller is waiting for a reading.
`sd`	Read the removable card’s filesystem.	`SD FAT32`, `SD exFAT` or the detected FAT variant. A mount failure returns `ERR sd <FatFs result number>`.

3 Mechanical information

3.1 Assembly and mounting

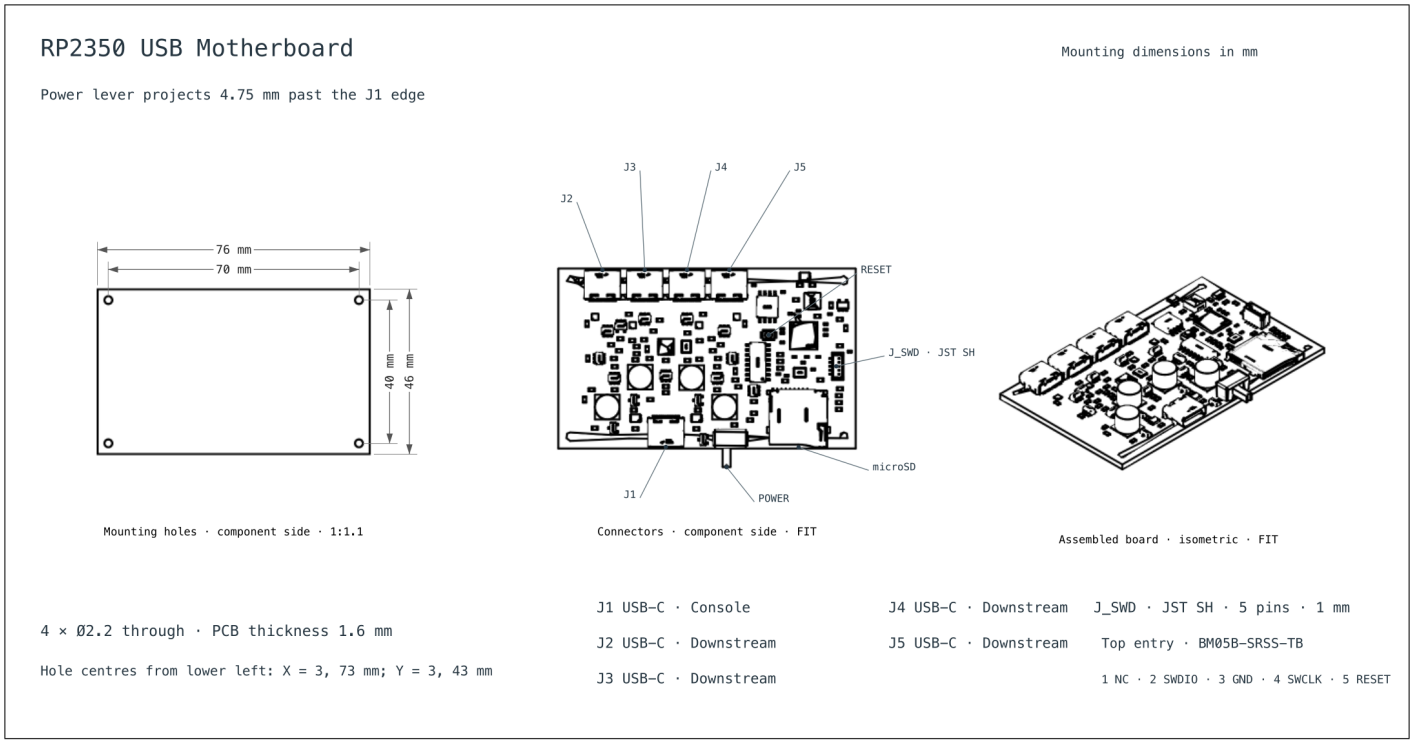

Component-side plan and isometric assembly. Dimensions in millimeters.

3.2 Installation dimensions

The PCB is **76 × 46 × 1.6 mm**. Four Ø2.2 mm holes accept M2 screws on a **70 × 40 mm** grid. With the downstream USB ports at the top, the hole centres are X = 3 and 73 mm, Y = 3 and 43 mm from the lower-left corner.

The power lever projects **4.75 mm past the J1 edge** and slides parallel to that edge. The assembled board is 50.75 mm deep including the lever. Allow 5.4 mm above the PCB for the tallest components and 1.9 mm below it for the switch leads, plus clearance for the power wires. Place the console USB-C cutout, power lever opening and microSD opening on the same enclosure face. Their centre lines are 27.5, 44 and 61.4 mm from the left PCB edge, respectively (the power dimension locates the switch body). The socket mouth sits 0.30 mm behind the PCB edge. Leave access above J_SWD for the programmer cable.

3.3 Design resources

Device guide · **Full-size mounting drawing** · **PCB and firmware source** · **Mounting drawing TSX**