ESP32-S3 Wi-Fi USB Motherboard

1.1 Description

The ESP32-S3 runs your program, connects to 2.4 GHz Wi-Fi and hosts up to four USB peripherals through its onboard hub. The module includes 16 MiB of flash and 8 MiB of PSRAM. The starter firmware lists attached USB devices, checks a microSD card and joins a wireless network.

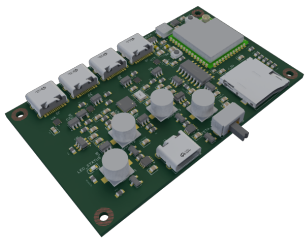

Assembly view

1.2 Device specifications

Parameter	Specification
Processor and memory	ESP32-S3, 16 MiB flash and 8 MiB PSRAM; microSD slot
Radio	2.4 GHz Wi-Fi; external 50 Ω antenna with U.FL-compatible plug required
USB host	Four downstream USB-C ports, 100 mA design budget per port
Power	Regulated 5 V at board pads
Programming	Front USB-C console, BOOT and RESET buttons
PCB dimensions	76 × 46 × 1.6 mm
Mounting holes	4 × Ø2.2 mm for M2 screws; 70 × 40 mm center spacing

1.3 Using the board

Attach a 2.4 GHz U.FL-compatible antenna. Apply regulated 5 V to TP_PWR1 with ground at TP_PWR2, and switch power on. Connect J1 to the computer to flash or open the console. J2–J5 serve downstream USB devices. See the device guide for first-time programming and Wi-Fi setup.

Device guide

2 Protocol reference

Open J1 at **115200 baud, 8N1**. Send one command per line ending in LF.

Command	Purpose	Reply
`id`	Identify the board and firmware.	`DEVICE tscircuit esp32-motherboard 1.0.0`
`help`	List supported commands.	One line of usage text.
`devices`	List enumerated USB addresses, including the hub.	One `USB <address>` line per device, then `OK`.
`sd`	Mount a FAT microSD card, read its capacity and unmount it.	`SD <capacity> MiB` or `ERR sd <reason>`.
`wifi scan`	Scan for nearby networks.	Up to 12 `AP <RSSI in dBm> <network name>` lines, then `OK`.
`wifi join <SSID><TAB><passphrase>`	Join a personal network. Use a literal tab between the two values.	`OK connecting` or `ERR wifi <reason>`.
`wifi status`	Check association and DHCP.	`WIFI disconnected`, `WIFI waiting for DHCP`, or `WIFI connected <IP>`.
`wifi leave`	Disconnect and clear the Wi-Fi configuration.	`OK` or `ERR wifi <reason>`.

The host supports low-speed and full-speed USB, up to 12 Mbit/s shared across the hub. Simultaneous device transfers depend on how many endpoints each driver uses. To control a potentiometer or display, add the appropriate USB class driver to the starter. ESP-IDF host guide

3 Mechanical information

3.1 Assembly and mounting

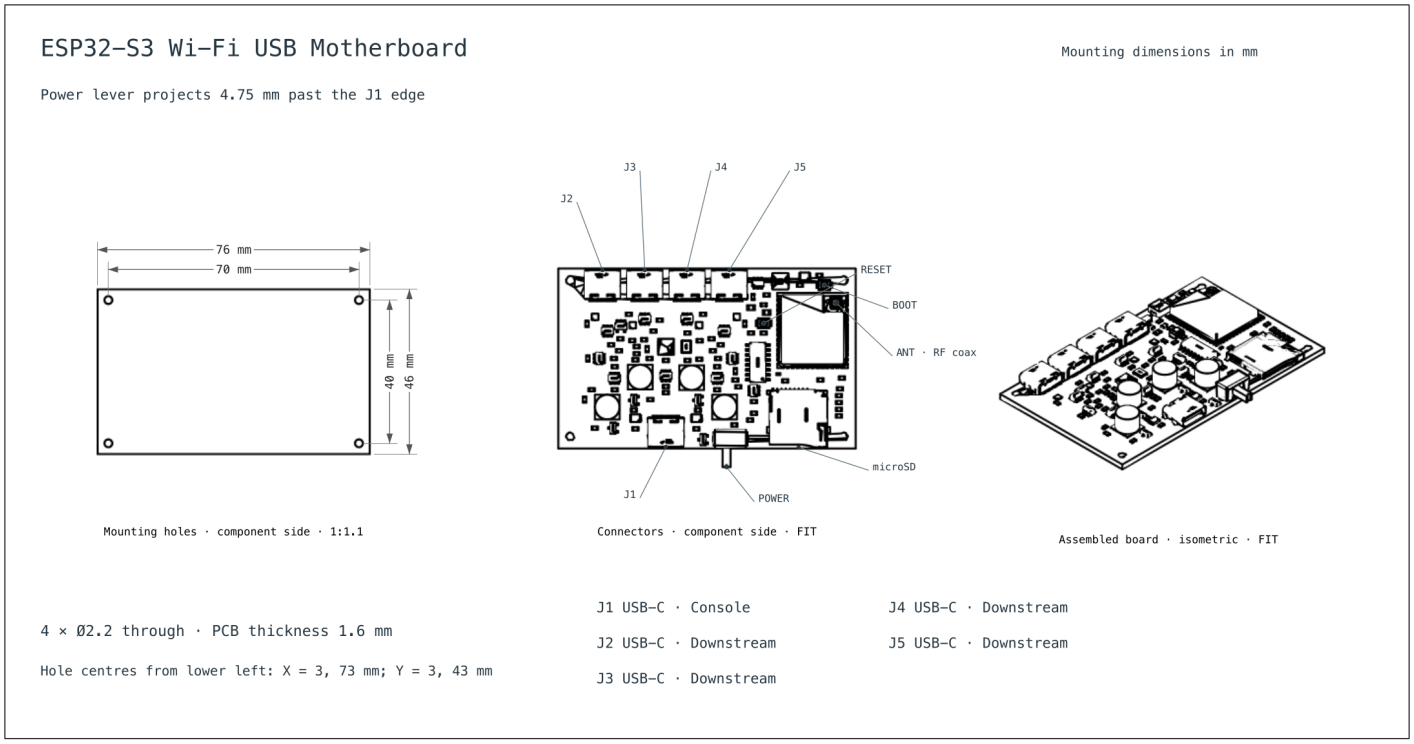

Component-side plan and isometric assembly. Dimensions in millimeters.

3.2 Installation dimensions

The **76 × 46 × 1.6 mm** PCB has four Ø2.2 mm M2 holes on a **70 × 40 mm** grid. Hole centres are 3 mm from the adjacent edges. The front console socket, power lever and microSD opening line up with the RP2350 motherboard. Allow 4.75 mm beyond the edge for the power lever, 1.9 mm below the board for its leads, and space above the module for the antenna plug and cable. Follow the antenna manufacturer’s clearance guidance when mounting it in the enclosure.

3.3 Design resources

Device guide · **Full-size mounting drawing** · **PCB and firmware source** · **Drawing TSX**